UNIVERSITY OF CAMBRIDGE INTERNATIONAL EXAMINATIONS
General Certificate of Education
Advanced Subsidiary Level and Advanced Level

PHYSICS **9702/12**

Paper 1 Multiple Choice **May/June 2011**

1 hour

Additional Materials: Multiple Choice Answer Sheet
Soft clean eraser
Soft pencil (type B or HB is recommended)

* 2 9 7 7 9 7 3 2 3 9 *

READ THESE INSTRUCTIONS FIRST

Write in soft pencil.
Do not use staples, paper clips, highlighters, glue or correction fluid.
Write your name, Centre number and candidate number on the Answer Sheet in the spaces provided unless this has been done for you.

There are **forty** questions on this paper. Answer **all** questions. For each question there are four possible answers **A**, **B**, **C** and **D**.
Choose the **one** you consider correct and record your choice in **soft pencil** on the separate Answer Sheet.

Read the instructions on the Answer Sheet very carefully.

Each correct answer will score one mark. A mark will not be deducted for a wrong answer.
Any working should be done in this booklet.

IB11 06_9702_12/4RP
© UCLES 2011

UNIVERSITY of CAMBRIDGE International Examinations

Data

speed of light in free space,	$c = 3.00 \times 10^{8}\,\text{m s}^{-1}$
permeability of free space,	$\mu_0 = 4\pi \times 10^{-7}\,\text{H m}^{-1}$
permittivity of free space,	$\varepsilon_0 = 8.85 \times 10^{-12}\,\text{F m}^{-1}$
elementary charge,	$e = 1.60 \times 10^{-19}\,\text{C}$
the Planck constant,	$h = 6.63 \times 10^{-34}\,\text{J s}$
unified atomic mass constant,	$u = 1.66 \times 10^{-27}\,\text{kg}$
rest mass of electron,	$m_\text{e} = 9.11 \times 10^{-31}\,\text{kg}$
rest mass of proton,	$m_\text{p} = 1.67 \times 10^{-27}\,\text{kg}$
molar gas constant,	$R = 8.31\,\text{J K}^{-1}\,\text{mol}^{-1}$
the Avogadro constant,	$N_\text{A} = 6.02 \times 10^{23}\,\text{mol}^{-1}$
the Boltzmann constant,	$k = 1.38 \times 10^{-23}\,\text{J K}^{-1}$
gravitational constant,	$G = 6.67 \times 10^{-11}\,\text{N m}^2\,\text{kg}^{-2}$
acceleration of free fall,	$g = 9.81\,\text{m s}^{-2}$

© UCLES 2011

Formulae

uniformly accelerated motion, $s = ut + \frac{1}{2}at^2$

$v^2 = u^2 + 2as$

work done on/by a gas, $W = p\Delta V$

gravitational potential, $\phi = -\frac{Gm}{r}$

hydrostatic pressure, $p = \rho gh$

pressure of an ideal gas, $p = \frac{1}{3}\frac{Nm}{V}\langle c^2 \rangle$

simple harmonic motion, $a = -\omega^2 x$

velocity of particle in s.h.m., $v = v_0 \cos \omega t$

$v = \pm \omega \sqrt{x_0^2 - x^2}$

electric potential, $V = \frac{Q}{4\pi\varepsilon_0 r}$

capacitors in series, $1/C = 1/C_1 + 1/C_2 + \ldots$

capacitors in parallel, $C = C_1 + C_2 + \ldots$

energy of charged capacitor, $W = \frac{1}{2}QV$

resistors in series, $R = R_1 + R_2 + \ldots$

resistors in parallel, $1/R = 1/R_1 + 1/R_2 + \ldots$

alternating current/voltage, $x = x_0 \sin \omega t$

radioactive decay, $x = x_0 \exp(-\lambda t)$

decay constant, $\lambda = \frac{0.693}{t_{\frac{1}{2}}}$

© UCLES 2011

1 Stress has the same SI base units as

A $\frac{\text{force}}{\text{mass}}$.

B $\frac{\text{force}}{\text{length}}$.

C $\frac{\text{force}}{\text{area}}$.

D energy.

2 To check calculations, the units are put into the following equations together with the numbers.

Which equation must be **incorrect**?

A force = 300 J / 6 m

B power = 6000 J × 20 s

C time = 6 m / 30 m s^{-1}

D velocity = 4 m s^{-2} × 30 s

Space for working

© UCLES 2011

3 In making reasonable estimates of physical quantities, which statement is **not** correct?

A The frequency of sound can be of the order of GHz.

B The wavelength of light can be of the order of 600 nm.

C The Young modulus can be of the order of 10^{11} Pa.

D Beta radiation is associated with one unit of negative charge.

4 The uncertainty in the value of the momentum of a trolley passing between two points X and Y varies with the choice of measuring devices.

Measurements for the same trolley made by different instruments were recorded.

1 distance between X and Y using a metre rule with cm divisions = 0.55 m

2 distance between X and Y using a metre rule with mm divisions = 0.547 m

3 timings using a wristwatch measuring to the nearest 0.5 s at X = 0.0 s and at Y = 4.5 s

4 timings using light gates measuring to the nearest 0.1 s at X = 0.0 s and at Y = 4.3 s

5 mass of trolley using a balance measuring to the nearest g = 6.4×10^{-2} kg

6 mass of trolley using a balance measuring to the nearest 10 g = 6×10^{-2} kg

Which measurements, one for each quantity measured, lead to the least uncertainty in the value of the momentum of the trolley?

A 1, 3 and 6 **B** 1, 4 and 6 **C** 2, 3 and 6 **D** 2, 4 and 5

Space for working

5 The time-base on a cathode-ray oscilloscope is set at 6 ms / cm.

A trace consisting of two pulses is recorded as shown in the diagram.

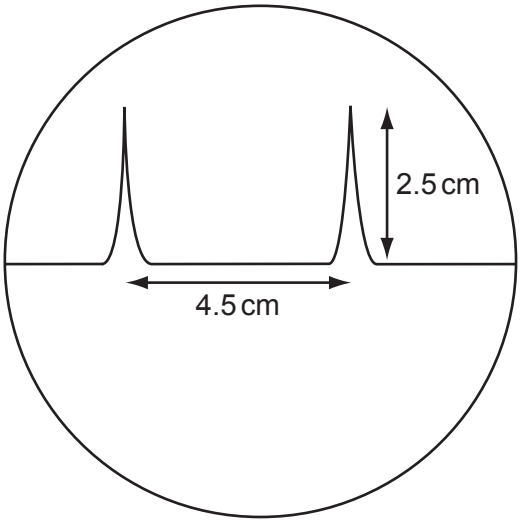

What is the time interval between the two pulses?

A 0.42 ms **B** 0.75 ms **C** 1.33 ms **D** 27 ms

6 A bullet is fired horizontally with speed v from a rifle. For a short time t after leaving the rifle, the only force affecting its motion is gravity. The acceleration of free fall is g.

Which expression gives the value of $\frac{\text{the horizontal distance travelled in time } t}{\text{the vertical distance travelled in time } t}$?

A $\frac{vt}{g}$ **B** $\frac{v}{gt}$ **C** $\frac{2vt}{g}$ **D** $\frac{2v}{gt}$

Space for working

© UCLES 2011

7 A particle moves in the manner shown by the velocity-time graph.

The displacement of the particle has been measured so that it is zero at $t = 0$. Point Q refers to a point in its motion.

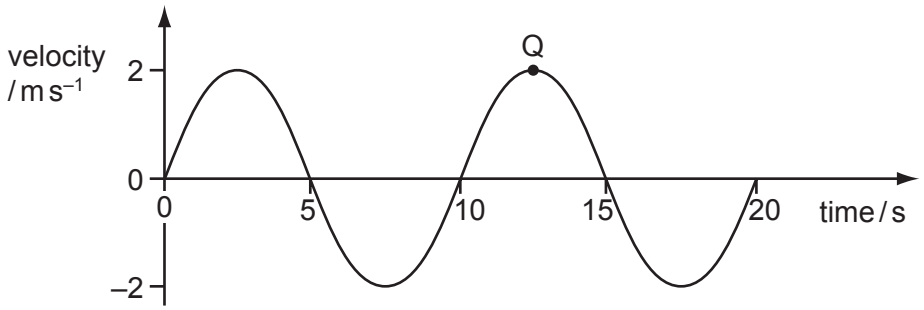

Which row of the table is correct?

	times for maximum displacement / s		acceleration at point Q / m s^{-2}
A	2.5	12.5	2
B	5	15	2
C	2.5	12.5	0
D	5	15	0

Space for working

8 A tennis ball falls freely, in air, from the top of a tall building.

Which graph best represents the variation of distance *s* fallen with time *t*?

A

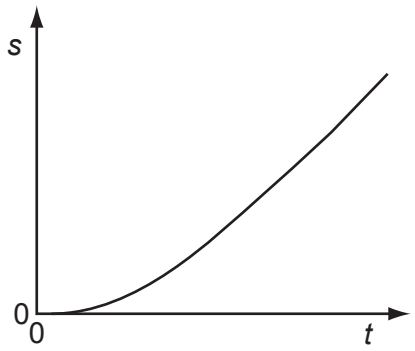

B

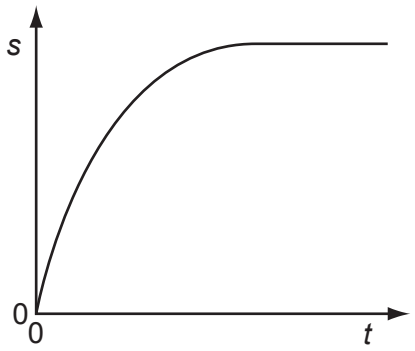

C

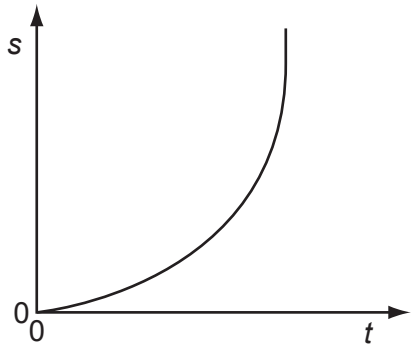

D

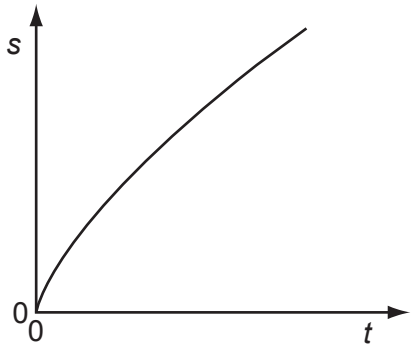

Space for working

© UCLES 2011

9 A small glider moves along a friction-free horizontal air track as shown below.

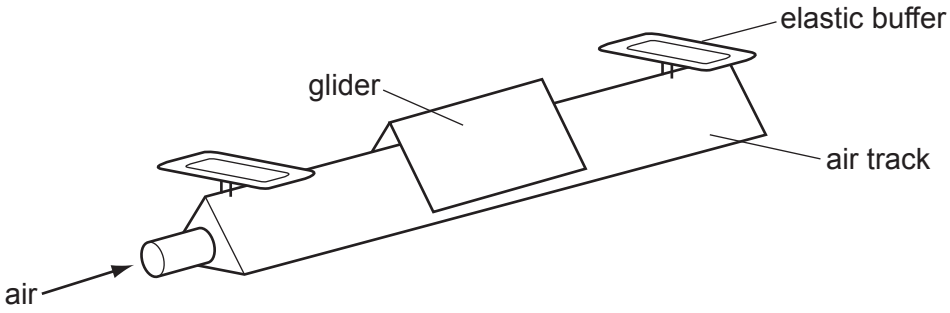

At each end of the air track there is a perfectly elastic buffer.

Which graph represents the variation with time t of the velocity v of the glider as it moves between the two buffers?

A

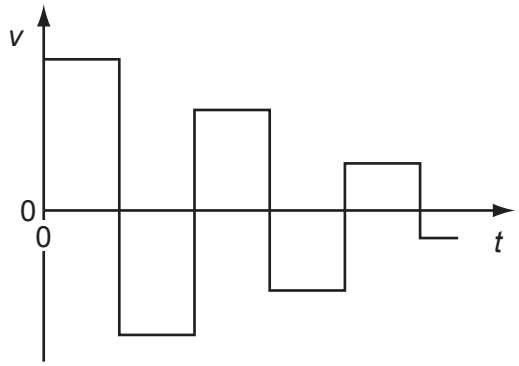

B

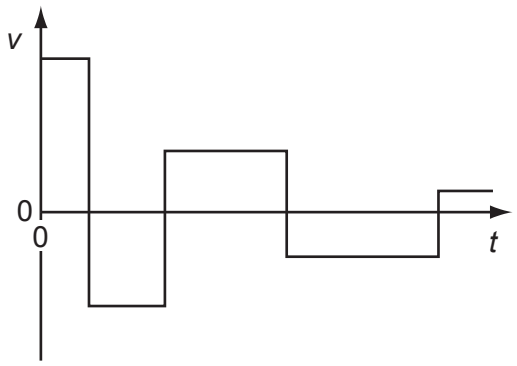

C

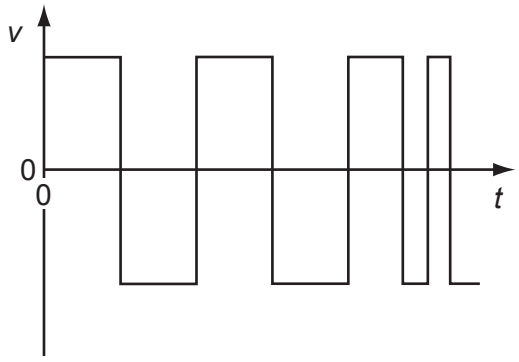

D

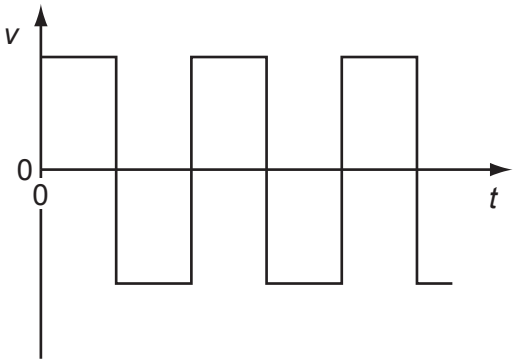

Space for working

10 A force F is applied to a freely moving object. At one instant of time, the object has velocity v and acceleration a.

Which quantities **must** be in the same direction?

A a and v only

B a and F only

C v and F only

D v, F and a

11 The momentum of an object changes from $160\,\text{kg m s}^{-1}$ to $240\,\text{kg m s}^{-1}$ in 2 s.

What is the mean resultant force on the object during the change?

A 40 N **B** 80 N **C** 200 N **D** 400 N

12 A car accelerates in a straight line.

A graph of the momentum of the car is plotted against time.

What is evaluated by finding the gradient of the graph at a particular time?

A the acceleration of the car

B the resultant force on the car

C the kinetic energy of the car

D the power supplied to the car

Space for working

© UCLES 2011

13 The diagram shows a particle P, travelling at speed v, about to collide with a stationary particle Q of the same mass. The collision is perfectly elastic.

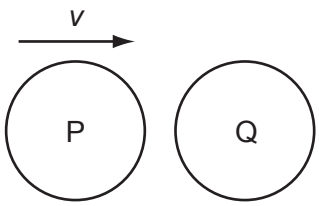

Which statement describes the motion of P and of Q immediately after the collision?

A P rebounds with speed $\frac{1}{2}v$ and Q acquires speed $\frac{1}{2}v$.

B P rebounds with speed v and Q remains stationary.

C P and Q both travel in the same direction with speed $\frac{1}{2}v$.

D P comes to a standstill and Q acquires speed v.

14 A stone is projected horizontally in a vacuum and moves along the path shown.

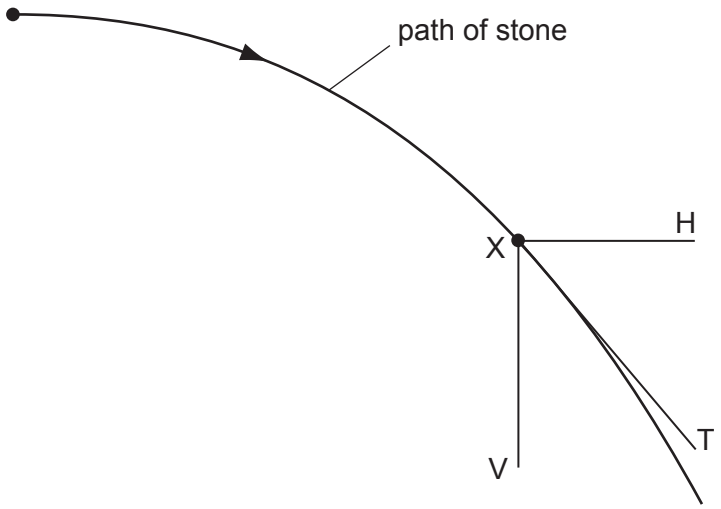

X is a point on this path. XV and XH are vertical and horizontal lines respectively through X. XT is the tangent to the path at X.

Along which directions do forces act on the stone at X?

A XV only **B** XH only **C** XV and XH **D** XT only

Space for working

15 The diagrams all show a pair of equal forces acting on a metre rule.

Which diagram shows forces that provide a couple and zero resultant force?

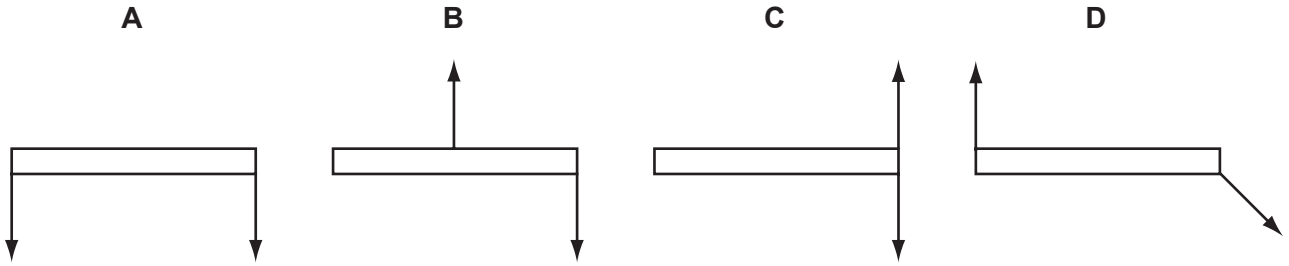

16 A uniform rod XY of weight 10.0 N is freely hinged to a wall at X. It is held horizontal by a force *F* acting from Y at an angle of 30° to the horizontal, as shown.

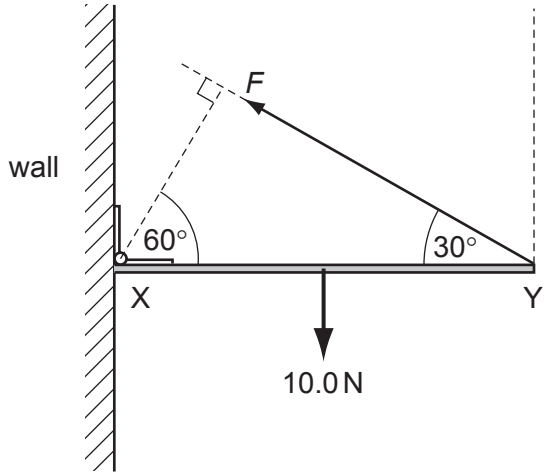

What is the value of *F*?

A 5.0 N **B** 8.7 N **C** 10.0 N **D** 20.0 N

Space for working

© UCLES 2011

17 The diagram shows two fixed pins, Y and Z. A length of elastic is stretched between Y and Z and around pin X, which is attached to a trolley.

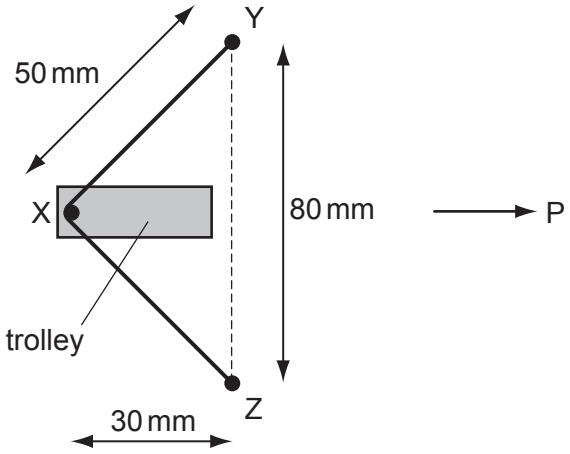

X is at the centre of the elastic and the trolley is to be propelled in the direction P at right angles to YZ. The tension in the elastic is 4 N.

What is the force accelerating the trolley in the direction P when the trolley is released?

A 2.4 N **B** 3.2 N **C** 4.8 N **D** 6.4 N

18 An electric motor produces 120 W of useful mechanical output power. The efficiency of the motor is 60 %.

Which row is correct?

	electrical power input / W	waste heat power output / W
A	72	48
B	192	72
C	200	72
D	200	80

Space for working

© UCLES 2011

19 A hammer with 10 J of kinetic energy hits a nail and pushes it 5.0 mm into a plank.

Both the hammer and nail come to rest after the collision.

What is the average force that acts on the nail while it moves the 5.0 mm?

A 0.050 N **B** 2.0 N **C** 50 N **D** 2000 N

20 The diagram shows two vessels, P and Q, both with sides inclined at 45°.

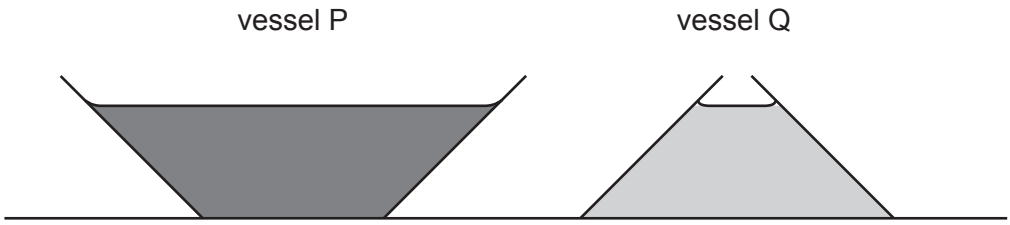

Vessel P tapers outwards and vessel Q tapers inwards, as shown.

Both vessels contain a liquid. The depth of the liquid in the vessels is the same. The liquid in vessel P is twice as dense as the liquid in vessel Q.

What is the ratio $\frac{\text{pressure due to the liquid on the base of P}}{\text{pressure due to the liquid on the base of Q}}$?

A $\frac{2}{1}$ **B** $\frac{\sqrt{2}}{1}$ **C** $\frac{1}{\sqrt{2}}$ **D** $\frac{1}{2}$

Space for working

21 Two solid substances P and Q have atoms of mass M_P and M_Q respectively. They have n_P and n_Q atoms per unit volume.

The density of P is greater than the density of Q.

What **must** be correct?

A $M_P > M_Q$

B $n_P > n_Q$

C $M_P n_P > M_Q n_Q$

D $\frac{M_P}{n_P} > \frac{M_Q}{n_Q}$

22 The table summarises some descriptions of evaporation.

Which row of the table is correct?

	involves a change in state from liquid to vapour	occurs at a fixed temperature	involves a reduction in the average kinetic energy of the remaining atoms
A	true	true	true
B	true	false	true
C	true	false	false
D	false	true	false

Space for working

23 The behaviour of a wire under tensile stress may be described in terms of the Young modulus E of the material of the wire and of the force per unit extension k of the wire.

For a wire of length L and cross-sectional area A, what is the relation between E and k?

A $E = \frac{A}{kL}$ **B** $E = \frac{kA}{L}$ **C** $E = \frac{kL}{A}$ **D** $E = \frac{L}{kA}$

24 The diagram shows the structure of part of a mattress.

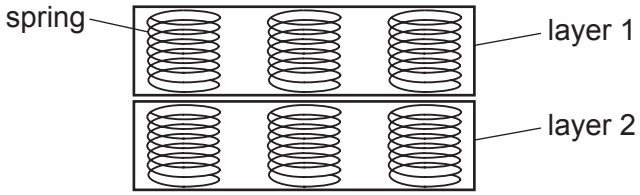

The manufacturer wants to design a softer mattress (one which will compress more for the same load).

Which change will **not** have the desired effect?

A using more layers of springs

B using more springs per unit area

C using springs with a smaller spring constant

D using springs made from wire with a smaller Young modulus

25 In which order of magnitude are the frequencies of electromagnetic waves in the visible spectrum?

A 10^{12} Hz **B** 10^{13} Hz **C** 10^{14} Hz **D** 10^{15} Hz

Space for working

© UCLES 2011

26 A transverse progressive wave is set up on a string.

The graph shows the variation with time of displacement for a point on this string.

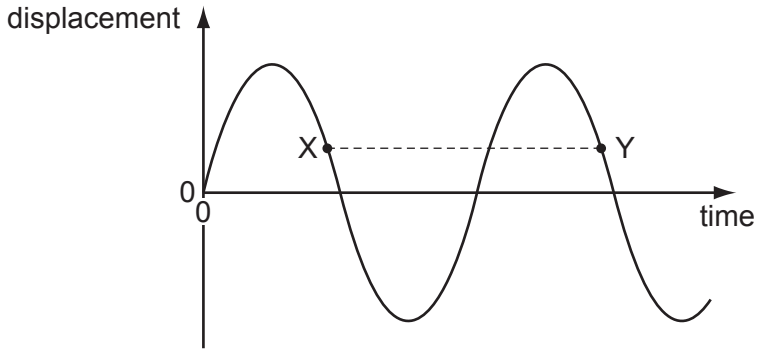

The separation XY on the graph represents the ……1…… of the wave.

X and Y have equal ……2…… .

Which words correctly complete gaps 1 and 2?

	1	2
A	time period	amplitudes
B	time period	displacements
C	wavelength	amplitudes
D	wavelength	displacements

27 If a wave can be polarised, it **must** be

A a longitudinal wave.

B an electromagnetic wave.

C a sound wave.

D a transverse wave.

Space for working

28 In which situation does diffraction occur?

A A wave bounces back from a surface.

B A wave passes from one medium into another.

C A wave passes through an aperture.

D Waves from two identical sources are superposed.

29 The diagrams show the arrangement of apparatus for a Young's slits experiment and also part of the pattern formed on the screen with a ruler placed next to it.

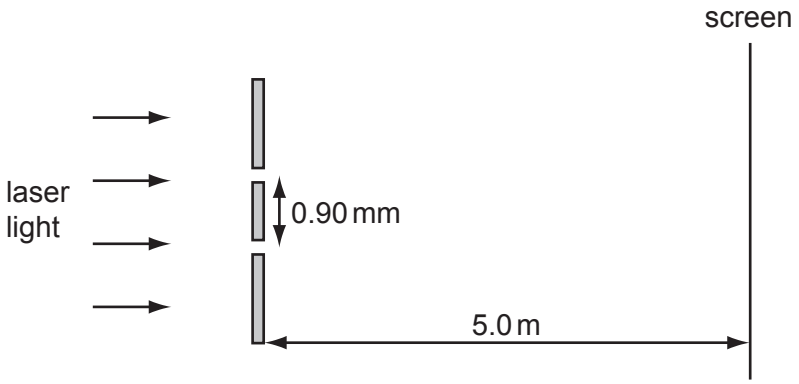

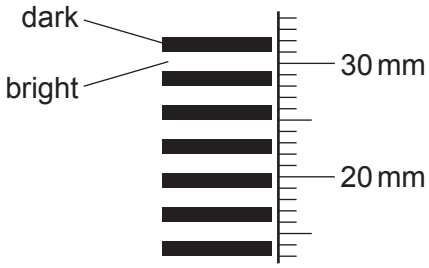

What is the wavelength of the light?

A 4.8×10^{-7} m **B** 5.4×10^{-7} m **C** 3.2×10^{-6} m **D** 3.4×10^{-6} m

Space for working

© UCLES 2011

30 The diagram shows two parallel metal plates connected to a d.c. power supply through a resistor.

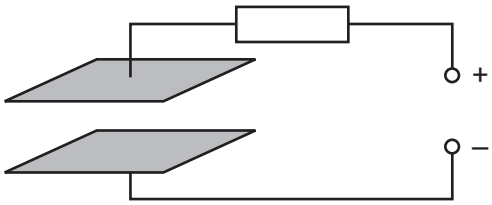

There is a uniform electric field in the region between the plates.

Which change would cause a **decrease** in the strength of the electric field?

A a small increase in the distance between the plates

B a small increase in the potential difference between the plates

C a small increase in the value of the resistor

D a small increase to the area of both plates

Space for working

31 In each electric field diagram, a positively charged particle is moved from X to Y.

In which diagram would the particle experience an increasing repulsive force?

A

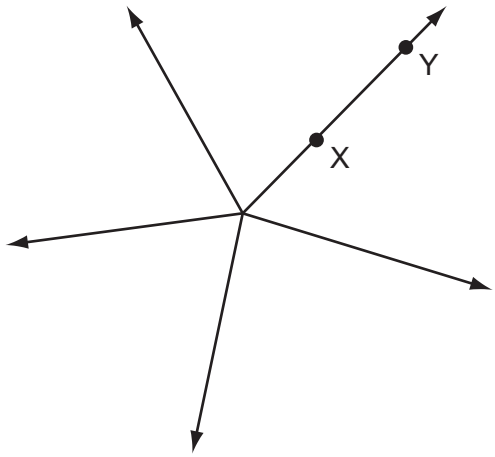

B

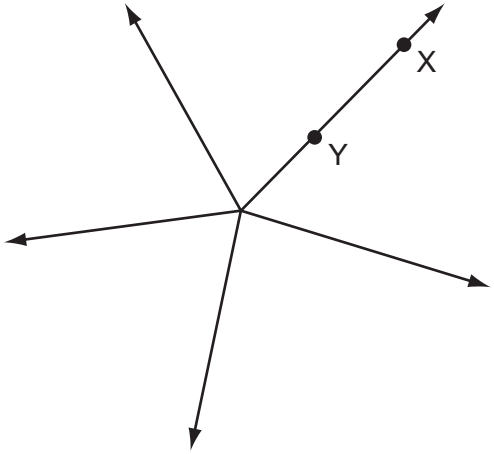

C

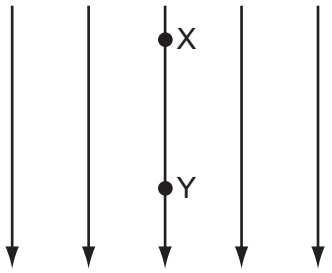

D

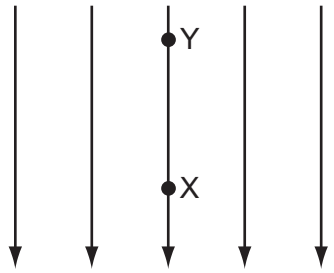

32 What describes the electric potential difference between two points in a wire that carries a current?

A the force required to move a unit positive charge between the points

B the ratio of the energy dissipated between the points to the current

C the ratio of the power dissipated between the points to the current

D the ratio of the power dissipated between the points to the charge moved

Space for working

© UCLES 2011

33 A cylindrical piece of a soft, electrically-conducting material has resistance R. It is rolled out so that its length is doubled but its volume stays constant.

What is its new resistance?

A $\frac{R}{2}$ **B** R **C** $2R$ **D** $4R$

34 A source of electromotive force (e.m.f.) E has a constant internal resistance r and is connected to an external variable resistor of resistance R.

As R is increased from a value below r to a value above r, which statement is correct?

A The terminal potential difference remains constant.

B The current in the circuit increases.

C The e.m.f. of the source increases.

D The largest output power is obtained when R reaches r.

35 Which graph best represents the way in which the current I through a thermistor depends upon the potential difference V across it?

A

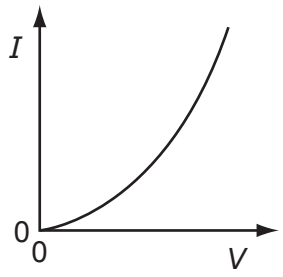

B

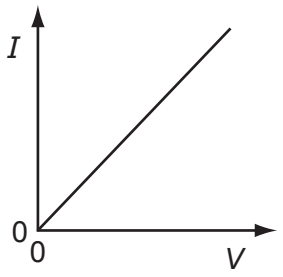

C

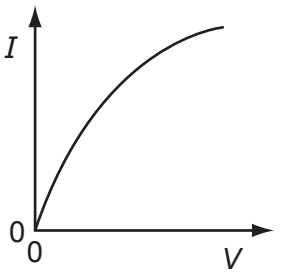

D

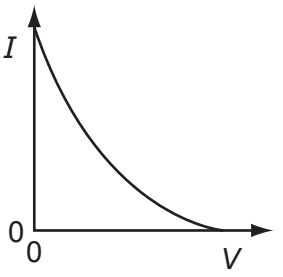

Space for working

36 Safety on railways is increased by using several electrical switches.

In the diagram, switches P, Q, R, S and T control the current through a green lamp.

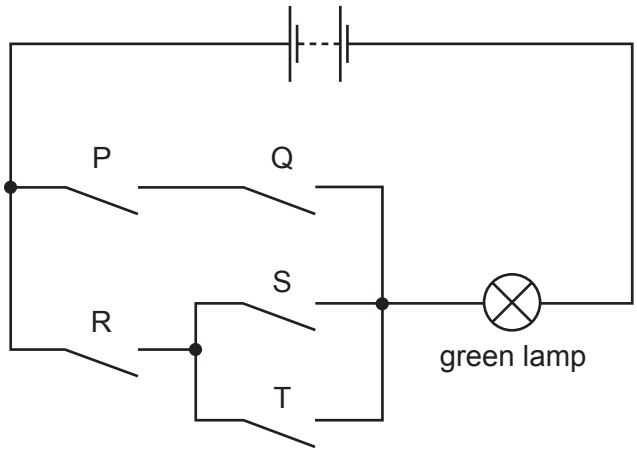

Which row does **not** allow the green lamp to light?

	P	Q	R	S	T
A	closed	closed	closed	open	closed
B	closed	open	closed	closed	open
C	closed	open	open	closed	closed
D	open	open	closed	open	closed

Space for working

© UCLES 2011

37 The diagram shows a fixed resistor and a light-dependent resistor (LDR) in series with a constant low-voltage supply.

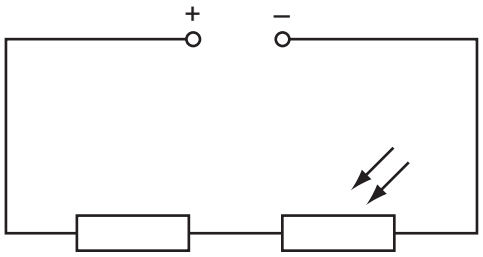

When the LDR is in the dark, the fixed resistor and the LDR have the same value of resistance.

Light is shone on the LDR.

What happens to the potential differences across the two components?

	p.d. across resistor	p.d. across LDR
A	decreased	increased
B	increased	decreased
C	no change	increased
D	no change	decreased

38 The diagram shows a d.c. circuit.

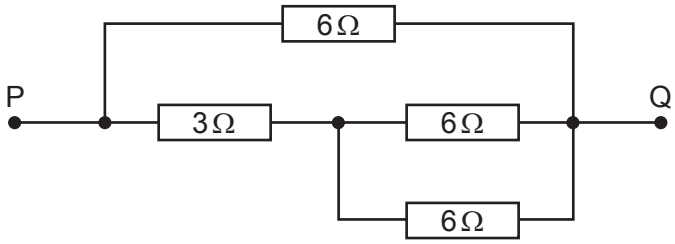

What is the resistance between the points P and Q due to the resistance network?

A 0.47Ω **B** 2.1Ω **C** 3.0Ω **D** 21Ω

Space for working

39 The uranium nucleus $^{238}_{92}U$ undergoes α-decay, producing nucleus X.

Nucleus X undergoes β-decay, producing nucleus Y.

For nucleus Y, what are the values of the proton number and nucleon number?

	proton number	nucleon number
A	89	234
B	89	236
C	91	234
D	91	236

40 Radon-220 is radioactive and decays to polonium-216 with the emission of an α-particle. The equation for the radioactive decay is shown.

$$^{220}_{86}Rn \rightarrow {}^{216}_{84}Po + {}^{4}_{2}He$$

How many neutrons are in the radon and polonium nuclei?

	Rn	Po
A	86	84
B	134	132
C	220	212
D	220	216

Space for working

Permission to reproduce items where third-party owned material protected by copyright is included has been sought and cleared where possible. Every reasonable effort has been made by the publisher (UCLES) to trace copyright holders, but if any items requiring clearance have unwittingly been included, the publisher will be pleased to make amends at the earliest possible opportunity.

University of Cambridge International Examinations is part of the Cambridge Assessment Group. Cambridge Assessment is the brand name of University of Cambridge Local Examinations Syndicate (UCLES), which is itself a department of the University of Cambridge.

© UCLES 2011